Electrolux PROFESSIONAL

Modular Cooking Range Line 700XP 4-Burner Gas Range on Electric Oven

ITEM #

MODEL #

NAME #

SIS #

AIA #



371003 (E7GCGH4CE0)	4-burner (5,5 kW each) gas range on electric oven (6 kW)
371125 (E7GCGH4CEN)	4-burner (5,5 kW each) gas range on electric oven (6 kW)

Short Form Specification

Item No.

To be installed on stainless steel feet with height adjustment up to 50 mm. High efficiency flower flame burners with flame regulator and protected pilot light. Flame failure device as standard on burners to protect against accidental extinguishing. Stainless steel oven chamber with 3 levels of runners to accomodate 2/1 GN shelves (2 steam pans). Ribbed oven base plate. Exterior panels in stainless steel with Scotch Brite finish. Pan supports in heavy duty cast iron. One piece pressed work top in 1.5 mm thick stainless steel. Right-angled side edges to allow flush-fitting junction between units.

APPROVAL:

Main Features

- Unit to have stainless steel feet with height adjustment up to 50 mm.
- The four 5.5 kW high efficiency flower flame burners allow the flame to adapt to different size pans.
- Gas appliance supplied for use with natural or LPG gas, conversion jets supplied as standard.
- Large sized pan support in cast iron (stainless steel as option) with long center fins to allow the use of the largest down to the smallest pans.
- Pan supports in cast iron are washable in a dishwasher.
- Burners to feature flame regulator.
- Flame failure device on each burner protects against gas leakage when accidental extinguishing of the flame occurs.
- Protected pilot light.
- Base compartment consists of an electric standard oven positioned beneath the base plate. Stainless steel oven chamber to have 3 levels of runners to accomodate 2/1 GN shelves (2 steam pans) and ribbed enamelled steel base plate.
- Oven thermostat adjustable from 140 °C to 300 °C.
- Double skinned door with pressed internal panel for heat insulation.
- IPx4 water protection.

Construction

- All exterior panels in Stainless Steel with Scotch Brite finishing.
- One piece pressed 1.5 mm work top in Stainless steel.
- Model has right-angled side edges to allow flush fitting joints between units, eliminating gaps and possible dirt traps.

Included Accessories

- 1 of GN2/1 chrome grid for static oven — PNC 164250

Optional Accessories

- GN2/1 chrome grid for static oven — PNC 164250 ❑
- Junction sealing kit — PNC 206086 ❑
- Draught diverter, 150 mm diameter — PNC 206132 ❑
- Matching ring for flue condenser, 150 mm diameter — PNC 206133 ❑
- Kit 4 wheels - 2 swivelling with brake - it is mandatory to install Base support and wheels — PNC 206135 ❑

- Flanged feet kit PNC 206136 ❑
- Frontal kicking strip for concrete installation, 800mm PNC 206148 ❑
- Frontal kicking strip for concrete installation, 1000mm PNC 206150 ❑
- Frontal kicking strip for concrete installation, 1200mm PNC 206151 ❑
- Frontal kicking strip for concrete installation, 1600mm PNC 206152 ❑
- Frontal kicking strip, 800mm (not for refr-freezer base) PNC 206176 ❑
- Frontal kicking strip, 1000mm (not for refr-freezer base) PNC 206177 ❑
- Frontal kicking strip, 1200mm (not for refr-freezer base) PNC 206178 ❑
- Frontal kicking strip, 1600mm (not for refr-freezer base) PNC 206179 ❑
- Kit 4 feet for concrete installation (not for 900 line free standing grill) PNC 206210 ❑
- Flue condenser for 1 module, 150 mm diameter PNC 206246 ❑
- Pair of side kicking strips PNC 206249 ❑
- Single burner smooth plate for direct cooking - fits frontal burners only PNC 206260 ❑
- Single burner ribbed plate for direct cooking- fits frontal burners only PNC 206261 ❑
- Single burner radiant plate for pan support PNC 206264 ❑
- Pair of side kicking strips for concrete installation PNC 206265 ❑
- Water column with swivel arm (water column extension not included) PNC 206289 ❑
- Water column extension for 700 line PNC 206291 ❑
- Stainless steel double grid for 2 burners PNC 206297 ❑
- Chimney upstand, 800mm PNC 206304 ❑
- Right and left side handrails PNC 206307 ❑
- Back handrail 800 mm PNC 206308 ❑
- Wok pan support for open burners (700/900) PNC 206363 ❑
- Base support for feet or wheels - 400mm (700/900) (only for 371125) PNC 206366 ❑
- Base support for feet or wheels - 800mm (700/900) PNC 206367 ❑
- Base support for feet or wheels - 1200mm (700/900) PNC 206368 ❑
- Base support for feet or wheels - 1600mm (700/900) PNC 206369 ❑
- Base support for feet or wheels - 2000mm (700/900) PNC 206370 ❑
- Rear paneling - 800mm (700/900) PNC 206374 ❑
- Rear paneling - 1000mm (700/900) PNC 206375 ❑
- Rear paneling - 1200mm (700/900) PNC 206376 ❑
- Chimney grid net, 500mm (700XP/900) PNC 206402 ❑
- Kit G.25.3 (NI) gas nozzles for 700 top and - freestanding on oven - gas cookers PNC 206460 ❑
- 2 side covering panels for free standing appliances PNC 216000 ❑
- Frontal handrail, 800mm PNC 216047 ❑
- Frontal handrail, 1200mm PNC 216049 ❑
- Frontal handrail, 1600mm PNC 216050 ❑
- Large handrail - portioning shelf, 800mm PNC 216186 ❑

CE

The company reserves the right to make modifications to the products without prior notice. All information correct at time of printing.

2026.11.20

Modular Cooking Range Line 700XP 4-Burner Gas Range on Electric Oven

Front

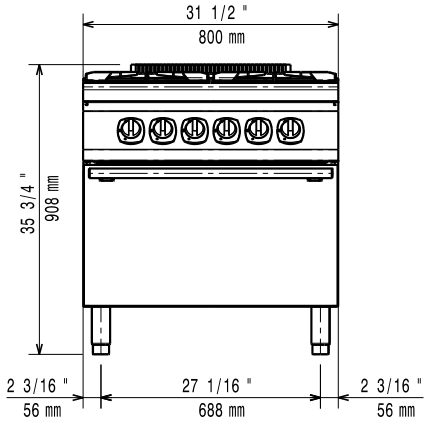

Side

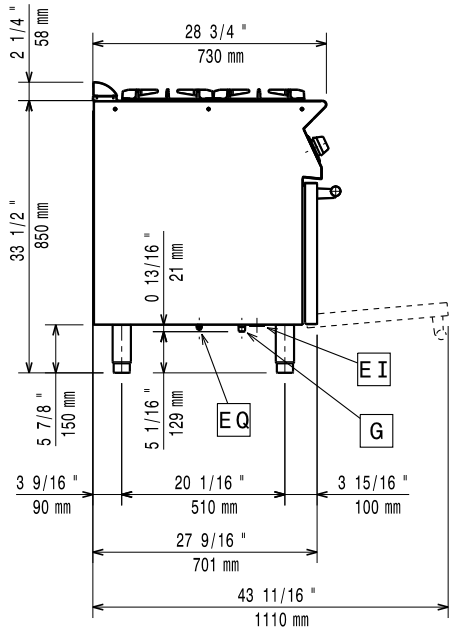

EI = Electrical inlet (power)
G = Gas connection

Top

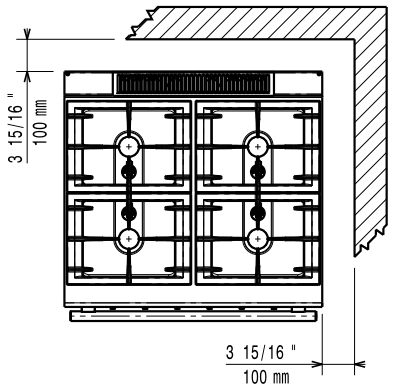

Electric

Supply voltage:	
371003 (E7GCGH4CE0)	380-400 V/3 ph/50-60 Hz
371125 (E7GCGH4CEN)	230 V/3 ph/50-60 Hz
Electrical power max.:	6 kW
Total Watts:	6 kW

Gas

Natural gas - Pressure:	
371003 (E7GCGH4CE0)	7" w.c. (17.4 mbar)
Gas Power:	22 kW
Standard gas delivery:	Natural Gas G20 (20mbar)
Gas Type Option:	LPG;Town
Gas Inlet:	1/2"

Key Information:

If appliance is set up or next to or against temperature sensitive furniture or similar, a safety gap of approximately 150 mm should be maintained or some form of heat insulation fitted.

Oven Heat Input:	6 kW
Oven working Temperature:	140 °C MIN; 300 °C MAX
Oven Cavity Dimensions (width):	540 mm
Oven Cavity Dimensions (height):	300 mm
Oven Cavity Dimensions (depth):	650 mm
Net weight:	
371003 (E7GCGH4CE0)	88 kg
371125 (E7GCGH4CEN)	80 kg
Shipping weight:	
371003 (E7GCGH4CE0)	102 kg
371125 (E7GCGH4CEN)	103 kg
Shipping height:	
371003 (E7GCGH4CE0)	1080 mm
371125 (E7GCGH4CEN)	1140 mm
Shipping width:	820 mm
Shipping depth:	860 mm
Shipping volume:	
371003 (E7GCGH4CE0)	0.76 m³
371125 (E7GCGH4CEN)	0.8 m³
Front Burners Power:	5.5 - 5.5 kW
Back Burners Power:	5.5 - 5.5 kW
[NOT TRANSLATED]	N7CG
Back Burners Dimension - mm	Ø 60 Ø 60
Front Burners Dimension - mm	Ø 60 Ø 60

The company reserves the right to make modifications to the products without prior notice. All information correct at time of printing.

2026.11.20